EDIFIER®

R2750DB MKII
Powered Bookshelf Speaker

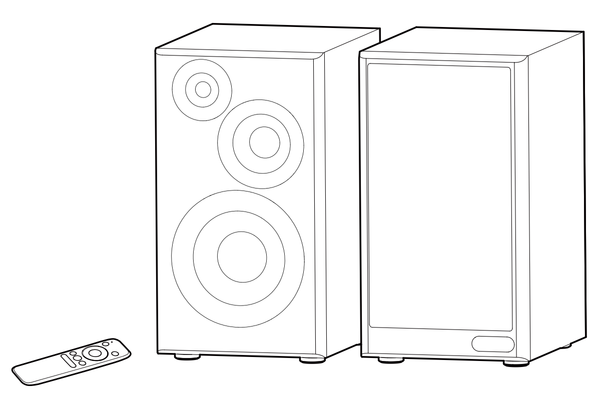

— Quick Start Guide —

Model: EDF100102

EN

1. EDIFIER ConneX app

EDIFIER ConneX app

With this app, you can
- control play from the Bluetooth source device,
- control the master volume,
- upgrade the firmware, and
- more functions.

Download EDIFIER ConneX app
1. With your smart device, scan the QR code on the quick start guide or the packaging.
- You can also search for "EDIFIER ConneX" in Apple App Store (iOS devices) or Google Play (Android devices).
2. Download and install the app.

How to use this app
1. Connect your smart device with the speaker via Bluetooth.
2. In Bluetooth mode, open EDIFIER ConneX App on your smart device.
3. Tap the menu for settings and playback control.

2. What's in the box?

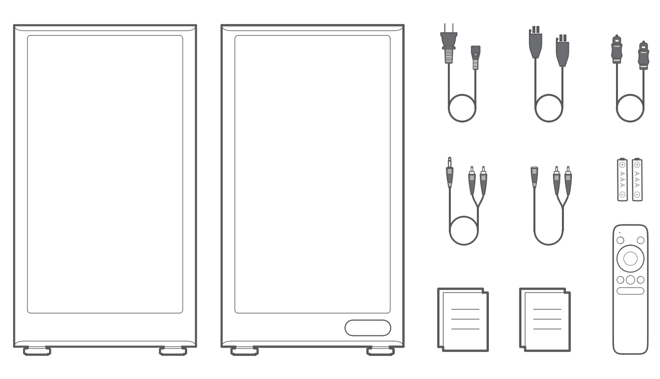

Note:
- Images are for illustrative purpose only and may differ from the actual product.
- For the need of technical improvement and system upgrade, information and specifications contained herein may be slightly different from actual product. If any difference is found, the actual product prevails.

3. Cable connection

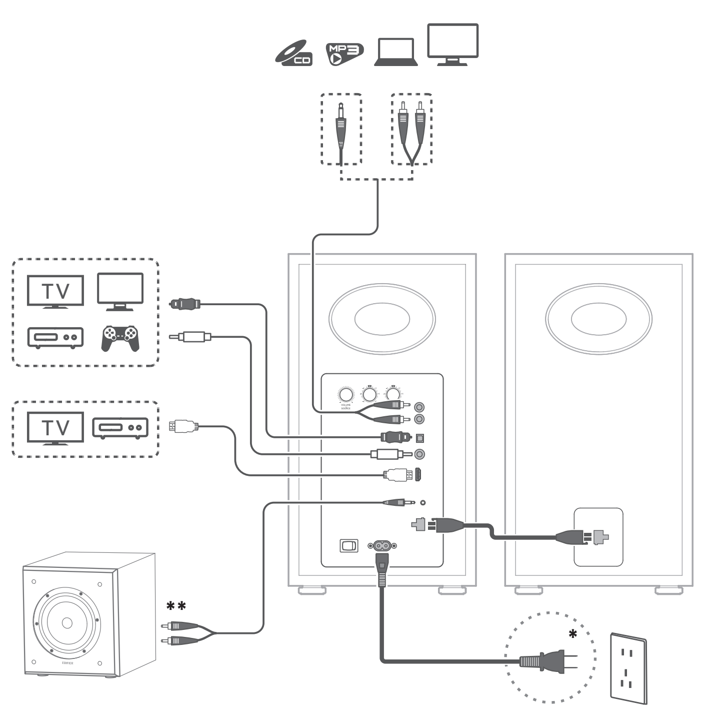

Note:
- Power input: 100-240 V~ 50/60 Hz 600 mA
- HDMI eARC Connection: Use an Ultra High Speed HDMI™ cable (not included) to connect the speaker's HDMI eARC port to the HDMI eARC or ARC port on your TV or source device.
- Refer to the user manual of your TV or source device for HDMI settings: (1) Enable the HDMI eARC or ARC function. (2) Set the digital audio output format to PCM. (3) Enable the HDMI CEC function to control the speaker with your TV or source device remote (e.g., standby/wake-up, mute, volume).

* This plug type is meant for illustrative purpose only.

** The subwoofer is not bundled. To connect it with a subwoofer, another suitable audio cable may be required.

4. Power on/off

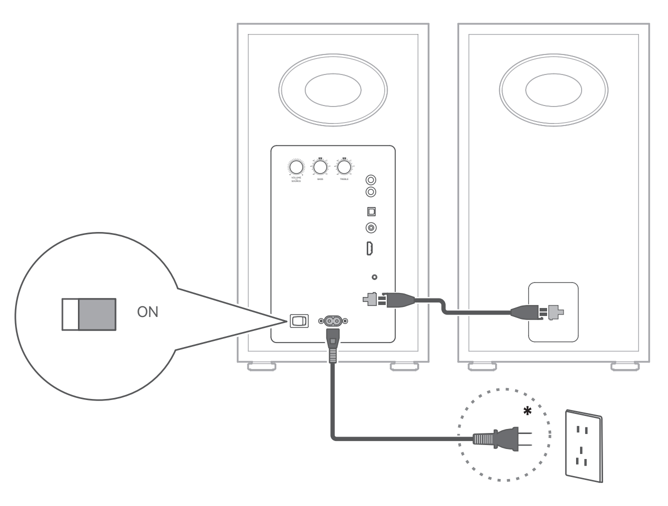

- Power on: Switch the main power button on the rear panel of the active speaker to "ON".
- Power off: Switch the main power button to "OFF".

5. Power saving function

1. In Bluetooth (or HDMI) input mode, the speaker will enter power saving mode after 15 minutes of inactivity (no audio playback and operation) if any Bluetooth device (or HDMI source device) is connected. When playback resumes, it will return to working mode in about 1 second.
2. In Bluetooth (or HDMI) input mode, the speaker will automatically power off after 15 minutes of inactivity (no operation) if no Bluetooth device (or HDMI source device) is connected.
3. In Line In, Optical, or Coaxial input mode, the speaker will automatically power off after 15 minutes of inactivity (no audio playback and operation).

Note: This function is enabled by default. To disable or re-enable this function, lower the volume to 0, and then press and hold the " ▶II " button on the remote control for 2 seconds. "ECO OFF" will be displayed on the screen to confirm the function has been disabled. Otherwise, "ECO ON" will be displayed. You can disable this feature in the menu of "My Device" > "Power Saving Mode" on EDIFIER ConneX App.

6. Standby & wake-up

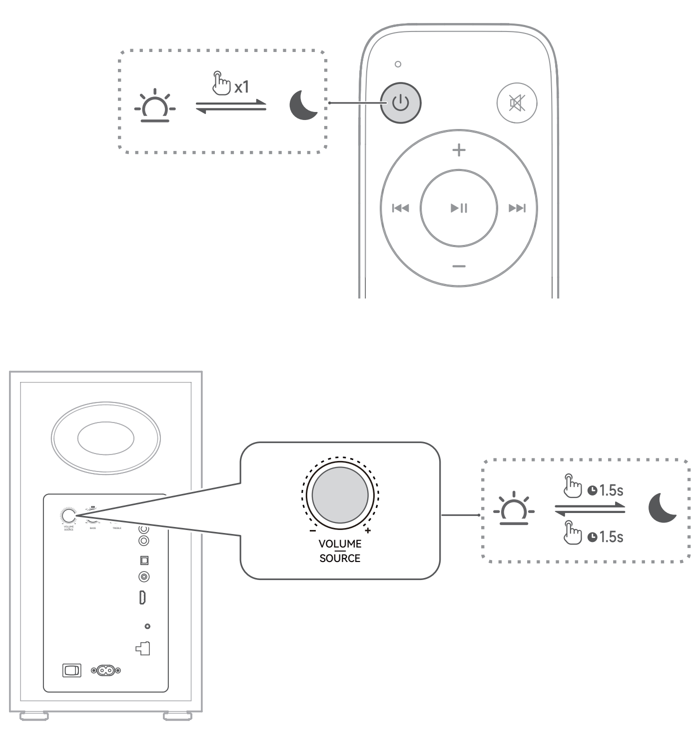

7. Source selection

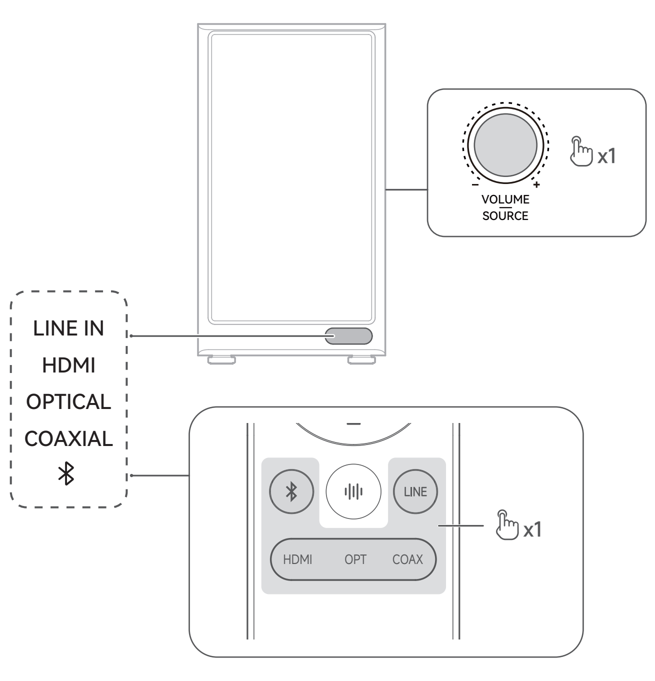

8. Bluetooth connection

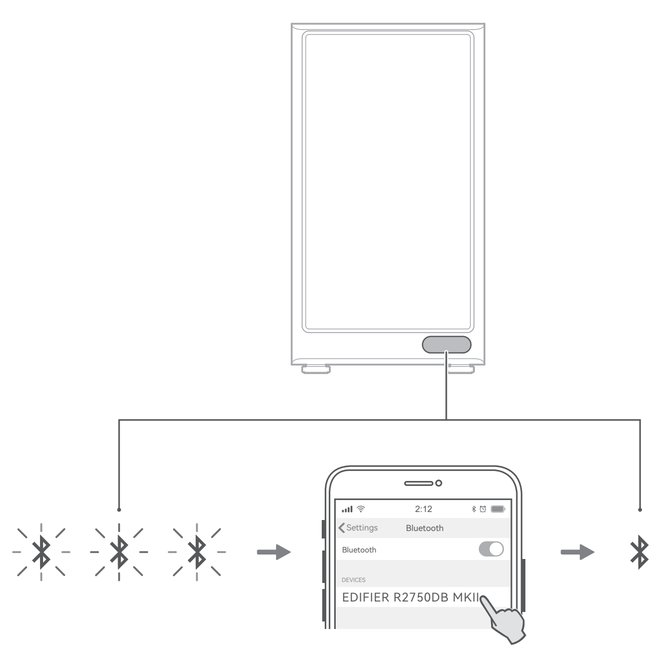

This speaker supports the simultaneous connection of two Bluetooth devices.

Connect to a device
1. Press the "VOLUME/SOURCE" knob on the active speaker or the " ✱ " button on the remote control to switch to Bluetooth input mode. If no device is connected, the speaker will auto-enter Bluetooth pairing mode (" ✱ " blinking on the screen). If not, double-press the "VOLUME/SOURCE" knob on the active speaker or press and hold the " ✱ " button on the remote control for 1.5 seconds.
2. On your device, select "EDIFIER R2750DB MKII" in its Bluetooth device list to connect, and " ✱ " will be steady displayed on the screen when the connection is established.
- To disconnect from the current Bluetooth device, double-press the "VOLUME/SOURCE" knob on the active speaker or press and hold the " ✱ " button on the remote control for 1.5 seconds.

Connect to two devices
1. Connect to a device, and then double-press the "VOLUME/SOURCE" knob on the active speaker or press and hold the " ✱ " button on the remote control for 1.5 seconds (" ✱ " blinking on the screen).
2. On the second device, select "EDIFIER R2750DB MKII" in its Bluetooth device list to connect, and " ✱ " will be steady displayed on the screen when the connection is established.
3. On the first device, select "EDIFIER R2750DB MKII" in its Bluetooth device list to reconnect.
- Pause or stop playback on the current Bluetooth device before streaming audio from the second one.

Note:
- If no device is connected in 10 minutes, the speaker will switch to Bluetooth hidden mode (" ✱ " displayed in breathing pattern on the screen). In this mode, (1) new devices cannot find the speaker, but (2) for a device that exists in the pairing record of this speaker, you can select "EDIFIER R2750DB MKII" from its Bluetooth device list to reconnect. To exit from Bluetooth hidden mode, press the "VOLUME/SOURCE" knob on the active speaker or the " ✱ " button on the remote control.
- After switched to Bluetooth input, the speaker will reconnect to the last connected devices automatically.

9. Play control

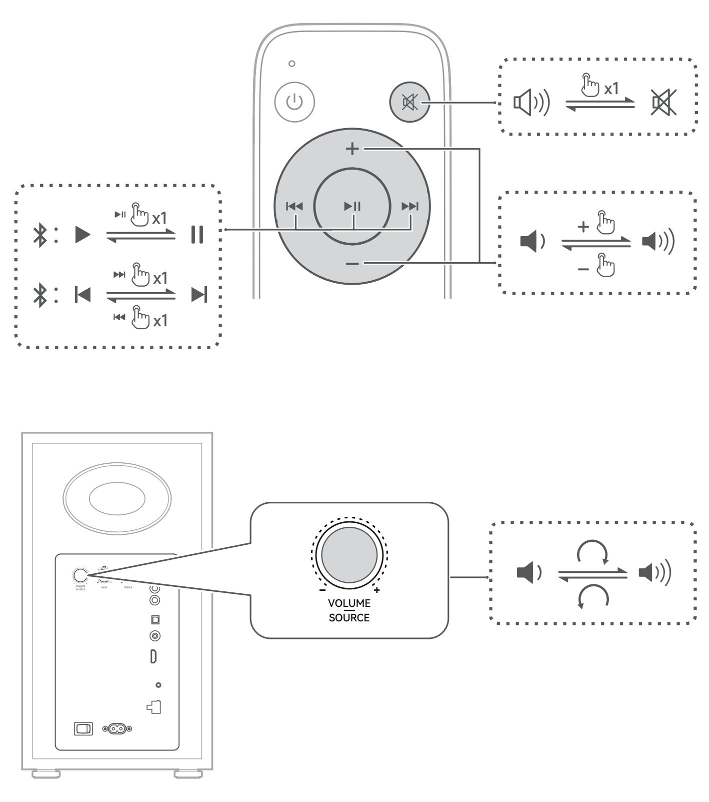

Note: Volume sync is not supported. To adjust the volume, adjust on the speaker and your device separately.

10. Battery replacement

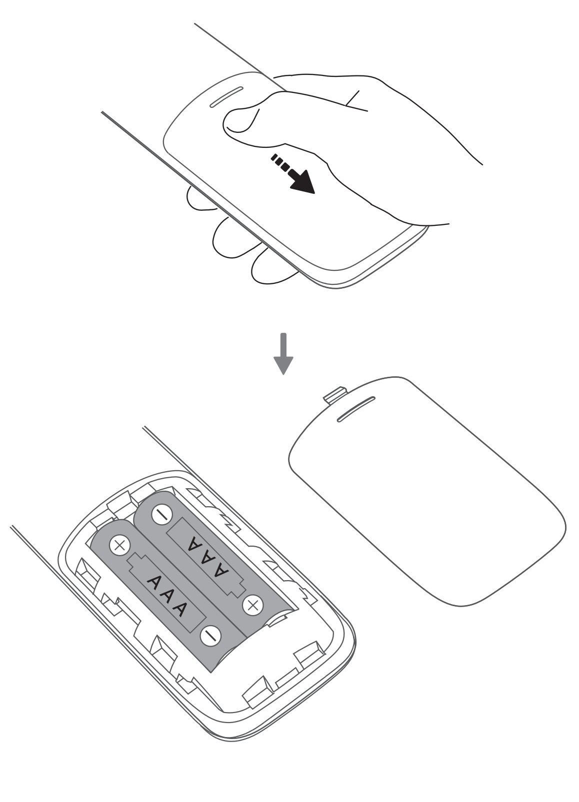

11. Specifications

Total output power (RMS): 12 W+12 W (Treble), 20 W+20 W (Mid), 40 W+40 W (Bass)
Frequency response: 45 Hz ~ 40 kHz

Declaration for EU
Frequency Band: 2.402 GHz ~ 2.480 GHz
RF Power Output: ≤13 dBm (EIRP)
There is no restriction of use.

12. Troubleshooting

Cannot connect to your Bluetooth device
- Make sure that the distance between this product and your Bluetooth device is less than 10 meters and there are no obstacles between them.
- Make sure that no device is connected to this product via Bluetooth.
- Make sure that this product is in Bluetooth pairing mode. If not, manually switch it to this mode.
- Restart this product, enable Bluetooth function on your Bluetooth device, and then try again.

No sound
- Make sure that this product is powered on.
- Make sure that this product and your device is properly connected.
- Make sure that the playback is not paused.
- Make sure that this product and your device are not muted.
- Increase the volume of this product and your device.

Noise coming from speakers
- EDIFIER speakers generate little noise, while the background noise of some audio devices is too high. Please unplug audio cables and turn the volume up. If no sound can be heard at 1 meter away from the speaker, there is no problem with this product.

To learn more about EDIFIER, please visit www.edifier.com
For EDIFIER warranty queries, please visit the relevant country page on www.edifier.com and review the section titled Warranty Terms.
USA and Canada: service@edifier.ca
South America: Please visit www.edifier.com (English) or www.edifierla.com (Spanish/Portuguese) for local contact information.